概 述

RTB系列膨胀阀具有双向节流功能，被广泛运用在热泵、空调、冷冻、冷藏系统。

特 点

- 稳定的过热度。
- 可提供MOP（马达过载保护）功能。
- 可提供各种接管尺寸和形式。
- 适用R22、R134a、R407c、R404A/R507、R410A冷媒等介质。
- RTB（T）1H-12H为单阀口型，RTB（T）14H-55H为双阀口型。
- 特殊要求请与上恒联系

General

RTB series are bi-flow expansion valves，applicable to hot pump，freezing , refrigeration and air conditioning plant.

Characteristics

- Constant superheat adjusting performance.
- MOP function is available (Max operating pressure).
- Various Inlet and outlet type and size can be made according to customer's requirement.
- Suitable for R22、R134a、R407c、R404A/R507、R410A.
- If you have special requirement , please contact STF.

RTB

RTBT

过热度调节

出厂过热度设定为3.5K，静过热度调节范围2～8K。
逆时针转动调节杆一圈，过热度减少1.5K。

Superheat adjusting

Factory setting :superheat 3.5K, static superheat adjusting range is between 2～8K.
Turn adjusting stem anticlockwise one round ,reduces superheat 1.5K.

选型表格 Technical data

R134a			R22			R407c			R404A/R507			R410a		
型号（Model）		名义容量 Nominal capacity (KW)	型号（Model）		名义容量 Nominal capacity (KW)	型号（Model）		名义容量 Nominal capacity (KW)	型号（Model）		名义容量 Nominal capacity (KW)	型号（Model）		名义容量 Nominal capacity (KW)
RTB(T)	1/2M	1.93	RTB(T)	1H	3.52	RTB(T)	1N	3.70	RTB(T)	2/3S	2.60	RTB(T)	1-1/4Z	4.20
RTB(T)	1M	3.85	RTB(T)	2H	7.00	RTB(T)	2N	7.24	RTB(T)	1-1/2S	5.25	RTB(T)	2-1/2Z	8.40
RTB(T)	1-2/3M	5.77	RTB(T)	3H	10.50	RTB(T)	3N	11.00	RTB(T)	2S	7.80	RTB(T)	3-1/2Z	12.60
RTB(T)	2M	7.70	RTB(T)	4H	14.00	RTB(T)	4N	14.50	RTB(T)	3S	10.50	RTB(T)	4-1/2Z	16.80
RTB(T)	2-3/4M	9.70	RTB(T)	5H	17.60	RTB(T)	5N	18.00	RTB(T)	3-2/3S	13.20	RTB(T)	6Z	21.10
RTB(T)	3-1/3M	11.60	RTB(T)	6H	21.10	RTB(T)	6N	21.50	RTB(T)	4-1/2S	15.80	RTB(T)	7-1/2Z	25.30
RTB(T)	4M	14.50	RTB(T)	7-1/2H	26.40	RTB(T)	7-1/2N	27.00	RTB(T)	5-1/2S	19.80	RTB(T)	9Z	31.70
RTB(T)	5-1/2M	19.36	RTB(T)	10H	35.20	RTB(T)	10N	35.60	RTB(T)	7-1/2S	26.40	RTB(T)	12Z	42.20
RTB(T)	6-1/2M	23.20	RTB(T)	12H	42.20	RTB(T)	12N	42.60	RTB(T)	8-1/2S	31.70	RTB(T)	14Z	50.60
RTBM(T)	7-3/4M	27.10	RTBM(T)	14H	49.30	RTBM(T)	14N	49.30	RTBM(T)	10S	37.00	RTBM(T)	17Z	59.20
RTBM(T)	10M	34.80	RTBM(T)	18H	63.40	RTBM(T)	18N	63.30	RTBM(T)	13S	47.50	RTBM(T)	22Z	76.10
RTBM(T)	12M	42.50	RTBM(T)	22H	77.40	RTBM(T)	22N	77.40	RTBM(T)	16S	58.10	RTBM(T)	26Z	92.90
RTBM(T)	14M	50.30	RTBM(T)	26H	91.50	RTBM(T)	26N	91.50	RTBM(T)	19S	68.60	RTBM(T)	31Z	109.80
RTBM(T)	20M	84.48	RTBM(T)	35H	123.20	RTBM(T)	35N	121.90	RTBM(T)	25S	88.00	RTBM(T)	42Z	147.80
RTBM(T)	25M	105.60	RTBM(T)	45H	158.40	RTBM(T)	45N	156.78	RTBM(T)	32S	112.64	RTBM(T)	55Z	193.60
RTBM(T)	31M	147.84	RTBM(T)	55H	193.60	RTBM(T)	55N	191.41	RTBM(T)	38S	133.76	RTBM(T)	65Z	228.80

注：名义制冷量是基于蒸发温度te=5℃，冷凝温度tc=40℃,进入膨胀阀液体制冷剂温度34℃，静止过热度4K。
Note: Nominal capacity is based on evaporating temperature te=5℃, condensing temperature tc=40℃,and refrigerant temperature ahead of valve34℃，static superheat：4K.
注：如需其它工作特性和规格产品，请与本公司接洽联系。
Note :If you have special requirement ,please contact STF.

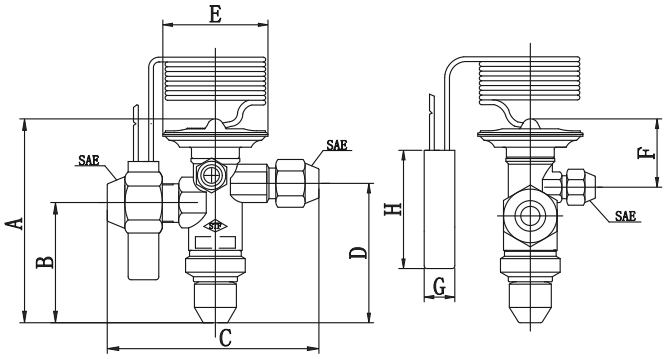

RTB1H-12H

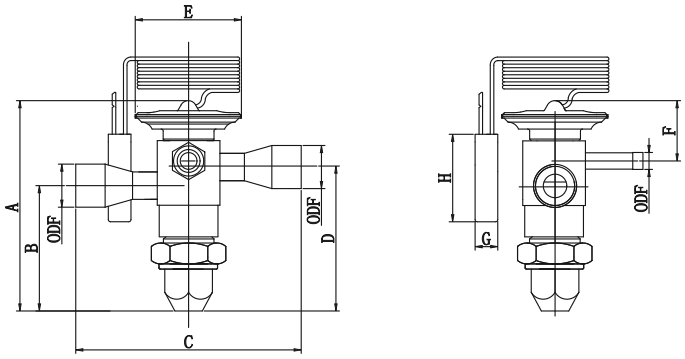

RTBM（T）14H-55H

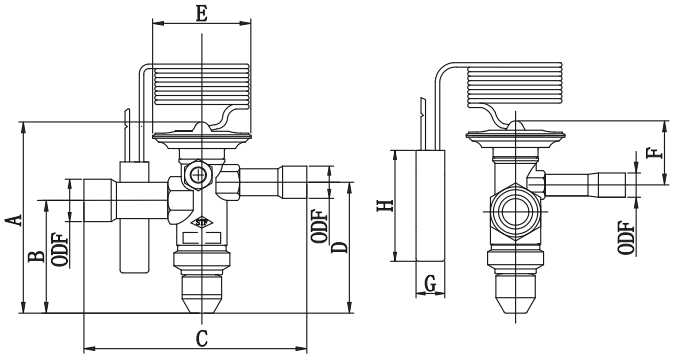

RTBT 1H-12H

外形尺寸 Dimensions

型号 Model	接管尺寸 Connection size 进口 Inlet	出口 Outlet	A mm	B mm	C mm	D mm	E mm	F mm	G mm	H mm	外平衡接口尺寸 External equalizer connection size	毛细管长度 Capillary length
RTB(T)1H	3/8ODF 3/8SAE	1/2ODF 1/2SAE	102	61	100	71	Φ55	26	Φ13	89	1/4SAE 1/4ODF	1.5m
RTB(T)2H			102	61	100	71	Φ55	26	Φ13	89		
RTB(T)3H			102	61	100	71	Φ55	26	Φ13	89		1.5m
RTB(T)4H			102	61	100	71	Φ55	26	Φ13	89		
RTB(T)5H	3/8ODF 3/8SAE	5/8ODF 5/8SAE	102	61	100	71	Φ55	26	Φ13	89		
RTB(T)6H	1/2ODF 1/2SAE	5/8ODF 5/8SAE	102	61	100	71	Φ55	26	Φ13	89		
RTB(T)7-1/2H			102	61	100	71	Φ55	26	Φ13	89		
RTB(T)10H			102	61	100	71	Φ55	26	Φ13	89		
RTB(T)12H			102	61	100	71	Φ55	26	Φ13	89		
RTBM(T)14H	5/8ODF	7/8ODF	108	66	110	73	Φ55	29	Φ13	89		1.5m 3m
RTBM(T)18H			108	66	110	73	Φ55	29	Φ13	89		
RTBM(T)22H			108	66	110	73	Φ55	29	Φ13	89		
RTBM(T)26H			108	66	110	73	Φ55	29	Φ13	89		
RTBM(T)35H	7/8ODF	9/8ODF	125	66	110	73	Φ55	29	Φ13	89		
RTBM(T)45H			125	66	110	73	Φ55	29	Φ13	89		
RTBM(T)55H			125	66	110	73	Φ55	29	Φ13	89		

注：毛细管长度有特殊要求可与本公司接洽联系。
Note :If you have special requirement ,please contact STF.

NRF(E)、 RT(E)、RTB、RTBT、RTBM(T)扩展容量表（KW）
NRF(E)、 RT(E)、RTB、RTBT、RTBM(T) extended capacity tables

R22 型号 规格	蒸发温度（℃） Evaporating temperature （℃）																	
	+10℃						+4.4℃						-6.7℃					
	通过阀的压降 Pressure drop across valve (MPa)																	
	0.57	0.72	0.90	1.08	1.26	1.44	0.57	0.72	0.90	1.08	1.26	1.44	0.57	0.72	0.90	1.08	1.26	1.44
1/2H	1.58	1.80	2.01	2.18	2.36	2.53	1.51	1.76	1.97	2.14	2.32	2.50	1.37	1.58	1.79	1.97	2.11	2.25
1H	3.16	3.60	4.02	4.36	4.72	4.92	3.06	3.52	3.87	4.22	4.57	4.92	2.47	3.20	3.52	3.87	4.22	4.57
1-1/2H	4.74	5.40	6.03	6.54	7.08	7.38	4.57	5.27	5.98	6.33	7.03	7.38	4.22	4.92	5.27	5.98	6.33	6.68
2H	6.32	7.20	8.04	8.72	9.44	9.85	5.98	7.03	7.74	8.79	9.14	9.85	5.62	6.33	7.03	7.74	8.44	9.14
3H	10.91	12.70	14.08	15.49	16.54	17.92	9.14	10.55	11.96	13.01	14.07	14.77	8.44	9.49	10.55	11.61	12.66	13.36
4H	14.55	16.89	18.73	18.59	22.00	23.83	12.19	14.06	15.95	17.35	18.76	19.69	11.25	12.65	14.06	15.48	16.88	17.81
5H	15.84	18.60	20.42	22.18	23.94	25.70	15.12	17.58	19.69	21.45	23.21	24.97	13.72	15.82	17.94	19.69	21.10	22.50
6H	19.01	22.32	24.50	26.62	28.73	30.84	18.14	21.10	23.63	25.74	27.85	29.96	16.46	18.62	21.53	23.63	25.32	27.00
7-1/2H	22.88	26.40	29.57	32.38	34.85	37.31	22.58	26.25	29.40	32.00	34.50	36.75	20.32	23.63	26.46	28.80	31.05	33.08
10H	31.33	36.26	40.48	44.35	48.22	51.40	30.10	35.00	39.20	42.56	46.50	49.00	27.01	31.50	35.28	38.30	41.85	44.10
12H	38.02	44.00	48.93	53.86	58.08	61.60	36.12	42.00	47.04	51.15	55.38	58.80	32.51	37.80	42.34	46.40	49.84	52.92
14H	45.40	52.10	58.40	64.10	69.00	73.90	44.70	51.70	57.70	63.40	68.60	73.20	43.60	50.30	56.30	62.00	66.90	71.50
18H	54.20	62.70	70.40	76.70	83.10	88.70	53.50	62.00	69.30	76.00	82.00	87.60	52.40	60.50	67.60	73.90	79.90	85.50
22H	67.50	78.50	87.50	96.10	103.50	110.90	67.20	77.40	86.60	94.70	102.40	109.50	65.50	75.30	84.50	92.60	100.00	109.50
26H	80.30	92.60	103.50	113.30	122.50	130.90	79.20	91.50	102.40	112.00	121.10	129.60	77.10	89.10	99.60	109.10	117.90	126.00
35H	108.10	124.60	139.40	152.80	164.80	176.40	106.70	123.20	137.60	151.00	163.00	174.20	103.80	120.00	134.10	147.10	158.80	169.70
45H	138.70	160.20	179.20	196.40	211.90	226.70	137.30	158.40	177.10	194.00	209.40	223.90	133.80	154.50	172.50	189.00	204.20	218.20
55H	169.70	195.70	218.90	240.10	259.10	277.00	167.60	193.60	216.50	244.00	256.30	273.90	163.30	188.70	210.80	230.90	249.60	266.80

R22 型号 规格	蒸发温度（℃） Evaporating temperature （℃）																	
	-17.8℃						-29℃						-40℃					
	通过阀的压降 Pressure drop across valve (MPa)																	
	0.72	0.90	1.08	1.26	1.44	1.62	0.90	1.08	1.26	1.44	1.62	1.80	1.08	1.26	1.44	1.62	1.80	1.98
1/2H	1.29	1.44	1.58	1.69	1.83	1.93	1.12	1.23	1.38	1.41	1.51	1.58	0.91	0.98	1.05	1.12	1.19	1.23
1H	2.55	2.85	3.13	3.38	3.52	3.87	2.25	2.46	2.64	2.87	2.99	3.16	1.83	1.97	2.11	2.25	2.36	2.46
1-1/2H	3.73	4.17	4.57	4.92	5.27	5.63	3.34	3.52	3.87	4.22	4.57	4.87	2.74	2.95	3.16	3.38	3.52	3.87
2H	5.17	5.78	6.33	6.68	7.38	7.44	4.57	4.92	5.27	5.63	5.98	6.33	3.52	3.67	3.80	4.27	4.57	4.92
3H	7.72	8.66	9.49	10.20	10.90	11.61	6.68	7.38	8.09	8.44	9.14	9.49	5.63	5.98	4.22	6.68	7.03	7.38
4H	10.29	11.55	12.65	13.60	14.53	15.34	8.91	9.84	10.78	11.25	12.19	12.56	7.51	7.93	5.63	8.91	9.37	9.84
5H	12.90	14.42	15.80	16.88	28.29	19.34	11.25	12.31	13.36	14.07	15.12	15.83	9.14	9.84	10.55	11.25	11.96	12.31
6H	15.48	17.30	18.96	20.27	33.95	23.20	13.50	14.77	16.03	16.88	18.14	19.00	10.97	11.81	12.66	13.50	14.35	14.77
7-1/2H	19.24	21.55	23.45	25.29	26.94	28.34	16.73	18.21	19.63	20.91	22.37	23.42	13.6	14.66	15.62	16.71	17.70	18.28
10H	25.66	28.73	31.19	34.08	35.92	37.97	22.31	24.22	26.46	27.88	29.83	31.23	18.09	19.76	20.83	22.29	23.6	24.37
12H	30.79	34.45	37.50	40.59	43.10	45.34	24.19	29.10	31.51	33.46	35.8	37.48	21.73	23.54	25.00	26.75	28.33	29.25
14H	40.80	45.80	50.00	54.20	57.70	61.20	32.40	35.60	38.40	41.20	43.60	46.10	23.90	26.00	28.20	30.30	32.00	33.80
18H	48.90	54.60	59.80	64.80	69.30	73.40	39.10	42.60	46.10	49.30	52.10	54.90	27.50	29.90	32.40	34.50	36.60	38.40
22H	61.30	68.30	75.00	81.00	86.60	91.90	48.60	53.50	57.70	61.60	65.50	67.00	37.30	40.50	43.40	45.80	48.20	50.70
26H	72.20	81.00	88.70	95.70	102.10	108.40	57.40	63.00	67.90	72.90	77.10	81.30	44.40	47.90	51.40	54.20	57.00	59.80
35H	97.20	108.80	119.30	128.80	137.60	146.10	77.40	84.80	91.50	97.90	103.80	109.50	59.50	64.40	68.60	72.70	76.70	80.60
45H	125.00	139.80	153.10	165.40	177.10	187.60	99.60	109.10	117.90	126.00	133.80	140.80	76.40	82.70	88.40	93.60	98.70	103.50
55H	153.10	171.10	187.30	202.40	216.10	229.50	121.80	133.40	143.90	153.80	163.30	172.10	93.60	101.00	108.10	114.40	120.70	126.70

NRF(E)、 RT(E)、RTB、RTBT、RTBM(T)扩展容量表（KW）
NRF(E)、 RT(E)、RTB、RTBT、RTBM(T) extended capacity tables

R134a 型号 规格	蒸发温度（℃） Evaporating temperature （℃）																	
	+10℃						+4.4℃						-6.7℃					
	通过阀的压降 Pressure drop across valve (MPa)																	
	0.30	0.42	0.57	0.72	0.90	1.08	0.30	0.42	0.57	0.72	0.90	1.08	0.42	0.57	0.72	0.90	1.08	1.26
1/4M	1.10	1.20	1.50	1.60	1.80	2.00	0.90	1.10	1.25	1.40	1.60	1.75	0.90	1.05	1.20	1.30	1.45	1.57
1/2M	2.20	2.40	3.00	3.20	3.60	4.00	1.80	2.20	2.50	2.80	3.20	3.50	1.80	2.10	2.40	2.60	2.90	3.10
1M	3.05	3.52	4.32	4.67	5.28	5.89	3.60	4.40	5.00	5.60	6.40	7.00	3.70	4.20	4.80	5.30	5.70	6.20
1-1/2M	4.40	5.10	6.30	6.80	7.20	8.10	5.60	6.60	7.50	8.40	9.70	10.60	5.70	6.10	7.00	7.90	8.80	9.20
2M	6.10	7.04	8.64	9.34	10.56	11.78	7.40	8.80	11.40	12.60	14.00	14.90	7.50	8.40	9.70	10.60	11.40	12.80
2-1/2M	9.80	11.30	13.50	15.10	17.00	18.70	9.25	11.00	14.25	15.75	17.50	18.60	9.38	10.50	12.13	13.25	14.25	16.00
3M	9.15	10.56	12.96	14.01	15.84	17.67	11.20	13.20	17.20	19.00	20.60	22.20	10.90	12.60	14.10	15.90	17.60	18.70
4M	12.20	14.08	17.28	18.68	21.12	23.56	14.93	17.60	22.93	25.33	27.47	29.60	14.53	16.80	18.80	21.20	23.47	24.93
5M	15.25	17.60	21.60	23.35	26.40	29.45	15.75	19.25	21.87	24.51	28.01	30.61	16.17	17.89	20.05	22.91	25.04	26.17
7-1/2M	22.88	26.40	32.40	35.03	39.60	44.18	21.48	26.15	29.82	33.42	38.20	41.74	22.05	24.40	27.34	31.25	34.15	35.69
9M	24.40	28.16	34.56	37.36	42.24	47.12	22.98	27.98	31.91	35.76	40.87	44.66	23.59	26.11	29.25	33.44	36.54	38.19
10M	33.00	38.90	47.00	51.00	54.00	61.00	37.00	45.00	49.00	52.00	58.00	61.00	35.00	43.00	47.00	50.00	56.00	59.00
12M	40.00	46.00	56.00	61.00	66.00	73.00	44.00	54.00	59.00	63.00	70.00	73.20	43.00	52.00	56.00	60.00	67.00	71.00
14M	49.00	57.00	70.00	75.00	80.00	90.00	55.00	57.00	72.00	77.00	87.00	91.50	53.00	65.00	70.00	74.00	83.00	87.00
20M	57.00	68.00	80.00	87.00	93.00	104.00	63.00	77.00	84.00	89.00	100.00	105.20	61.00	74.00	80.00	86.00	96.90	101.90
25M	78.00	87.00	107.00	115.00	123.00	138.00	84.00	103.90	111.00	119.00	133.50	139.60	81.00	99.00	107.00	114.00	128.00	134.00
31M	94.00	109.00	133.00	144.00	154.00	172.00	105.00	128.00	130.00	148.00	155.20	173.50	101.00	123.00	133.00	142.00	159.00	167.00

R134a 型号 规格	蒸发温度（℃） Evaporating temperature （℃）																	
	-17.8℃						-29℃						-40℃					
	通过阀的压降 Pressure drop across valve (MPa)																	
	0.42	0.57	0.72	0.90	1.08	1.26	0.57	0.72	0.90	1.08	1.26	1.44	0.57	0.72	0.90	1.08	1.26	1.44
1/4M	0.70	0.84	0.93	1.00	1.10	1.20	0.60	0.69	0.74	0.83	0.92	0.95	0.43	0.48	0.51	0.57	0.60	0.65
1/2M	1.40	1.70	1.90	2.00	2.20	2.40	1.20	1.40	1.50	1.70	1.80	1.90	0.90	1.00	1.05	1.10	1.20	1.30
1M	2.80	3.30	3.70	4.10	4.40	4.80	2.40	2.70	3.00	3.30	3.60	3.80	1.60	1.90	2.10	2.30	2.50	2.60
1-1/2M	4.20	4.60	5.20	6.10	6.50	7.00	3.60	4.10	4.40	4.80	5.20	5.70	2.50	2.80	3.10	3.40	3.80	3.90
2M	5.70	6.50	7.40	8.30	8.70	9.60	4.80	5.20	6.10	6.50	7.00	7.80	3.40	3.70	4.20	4.80	5.10	5.20
2-1/2M	7.13	8.13	9.25	10.38	10.88	12.00	6.00	6.50	7.63	8.13	8.75	9.75	4.25	4.63	5.25	6.00	6.38	6.50
3M	8.30	9.60	10.90	12.20	13.10	14.40	7.40	8.30	9.20	10.00	10.90	11.40	5.20	5.70	6.10	6.90	7.40	7.80
4M	11.06	12.80	14.53	16.27	17.47	19.20	9.87	11.07	12.27	13.33	14.53	15.20	6.93	7.60	8.13	9.20	9.87	10.40
5M	12.25	13.92	15.60	17.82	19.48	21.23	10.23	11.46	13.09	14.31	15.67	16.56	7.06	7.91	9.03	9.87	10.81	11.43
7-1/2M	16.65	18.97	21.26	24.31	26.56	28.95	13.94	15.63	17.86	19.52	21.37	22.58	9.62	10.78	12.32	13.47	14.74	15.58
9M	17.82	20.30	22.75	26.01	28.42	30.98	16.73	18.71	21.43	23.38	25.6	27.06	11.56	12.91	14.79	16.13	17.66	18.67
10M	33.00	36.00	38.10	43.50	45.70	47.20	22.30	24.60	26.50	29.10	30.30	32.50	14.00	16.00	17.00	19.00	20.00	21.00
12M	40.00	43.50	46.20	52.30	54.20	57.50	27.50	29.60	31.20	35.40	36.20	38.40	17.00	19.90	20.00	22.00	23.00	25.00
14M	50.20	53.60	57.80	64.20	67.50	70.30	33.40	36.50	38.20	43.20	45.30	47.80	21.00	23.00	25.00	28.00	29.00	30.00
20M	57.40	62.50	66.80	74.10	77.50	81.40	38.10	42.20	44.70	50.60	52.20	54.30	25.00	27.00	29.00	32.00	34.00	35.00
25M	76.50	82.10	88.60	97.90	103.10	107.50	54.20	55.40	59.60	66.30	69.10	72.10	33.00	36.00	38.00	42.00	44.00	46.00
31M	96.20	102.10	108.50	122.30	128.50	134.50	54.60	69.50	73.70	82.90	86.50	90.30	41.00	44.00	47.00	53.00	55.00	58.00

NRF(E)、 RT(E)、RTB、RTBT、RTBM(T)扩展容量表（KW）
NRF(E)、 RT(E)、RTB、RTBT、RTBM(T) extended capacity tables

R404A/ R507 型号 规格	蒸发温度（℃） Evaporating temperature （℃）																	
	+10℃						+4.4℃						-6.7℃					
	通过阀的压降 Pressure drop across valve (MPa)																	
	0.52	0.69	0.86	01.03	1.21	1.38	0.69	0.86	1.03	1.21	1.38	1.55	0.86	1.03	1.21	1.38	1.55	1.72
1/3S	1.14	1.22	1.26	1.43	1.57	1.67	1.12	1.27	1.41	1.55	1.66	1.78	1.18	1.28	1.41	1.53	1.66	1.78
2/3S	2.30	2.48	2.57	2.87	3.14	3.34	2.25	2.53	2.82	3.09	3.31	3.57	2.35	2.57	2.81	3.07	3.31	3.56
1 S	3.44	3.70	3.83	4.30	4.71	5.01	3.37	3.80	4.23	4.64	4.97	5.35	3.53	3.85	4.22	4.60	4.97	5.34
1-1/2 S	5.16	5.55	5.75	6.45	7.07	7.52	5.06	5.70	6.35	6.96	7.46	8.03	5.30	5.78	6.33	6.90	7.46	8.01
2 S	6.88	7.38	7.65	8.60	9.42	10.02	6.74	7.60	8.46	9.28	9.94	10.70	7.06	7.70	8.44	9.20	9.94	10.68
3 S	10.32	11.07	11.48	12.90	14.13	15.03	10.11	11.40	12.69	13.92	14.91	16.05	10.59	11.55	12.66	13.80	14.91	16.02
3-1/2S	12.04	12.95	13.32	15.09	16.53	17.59	11.83	13.34	14.85	16.29	17.44	18.78	12.39	13.51	14.81	16.15	17.44	18.74
4S	13.73	14.76	15.18	17.20	18.84	20.05	13.45	15.21	16.93	18.57	19.88	21.41	14.12	15.40	16.88	18.41	19.88	21.36
5 S	17.16	18.45	18.98	21.50	23.55	25.06	16.85	19.00	21.15	23.20	24.85	26.75	17.65	19.25	21.10	23.00	24.85	26.70
7 S	24.02	25.83	26.57	30.10	32.97	35.08	23.59	26.60	29.61	32.48	34.79	37.45	24.71	26.95	29.54	32.20	34.79	37.38
8-1/2 S	29.06	31.25	32.15	36.42	39.89	42.45	28.65	32.30	35.96	39.44	42.25	45.48	30.01	32.73	35.87	39.10	42.25	45.39
10 S	46.00	50.60	55.70	61.00	67.40	74.00	40.40	48.50	52.30	56.40	61.00	65.80	44.60	48.10	52.00	56.20	60.70	65.50
13S	55.20	60.72	66.84	73.20	80.88	88.80	48.48	58.20	62.76	67.68	73.20	78.96	53.52	57.72	62.40	67.44	72.84	78.60
16S	69.00	75.90	83.55	91.50	101.10	111.00	60.60	72.75	78.45	84.60	91.50	98.70	66.90	72.15	78.00	84.30	91.05	98.25
19S	82.80	91.08	100.26	109.80	121.32	133.20	72.72	87.30	94.14	101.52	109.80	118.44	80.28	86.58	93.60	101.16	109.26	117.90
25S	115.09	126.60	139.36	152.62	168.63	185.15	101.08	121.35	130.85	141.11	152.62	164.63	111.59	120.35	130.10	140.61	151.87	163.88
32S	159.98	175.98	193.71	212.14	234.40	257.36	140.50	168.67	181.89	196.15	212.14	228.84	155.11	167.28	180.84	195.45	211.10	227.79
38S	190.37	209.41	230.52	252.45	278.94	306.25	167.20	200.72	216.45	233.41	252.45	272.32	184.58	199.06	215.21	232.59	251.21	271.08

R404A/ R507 型号 规格	蒸发温度（℃） Evaporating temperature （℃）																	
	-17.8℃						-29℃						-40℃					
	通过阀的压降 Pressure drop across valve (MPa)																	
	1.03	1.21	1.38	1.55	1.72	1.90	1.21	1.38	1.55	1.72	1.90	2.07	1.38	1.55	1.72	1.90	2.07	2.24
1/3S	1.02	1.10	1.18	1.24	1.28	1.40	0.80	0.85	0.90	0.95	1.00	1.04	0.91	0.96	1.01	1.06	1.11	1.17
2/3S	2.03	2.21	2.36	2.47	2.55	2.80	1.60	1.70	1.80	1.90	2.00	2.07	1.83	1.92	2.02	2.11	2.22	2.33
1 S	3.05	3.31	3.54	3.71	3.83	4.20	2.40	2.55	2.70	2.85	3.00	3.11	2.74	2.88	3.03	3.17	3.33	3.50
1-1/2 S	4.58	4.97	5.31	5.57	5.75	6.30	3.60	3.83	4.05	4.28	4.50	4.67	4.12	4.33	4.56	4.77	5.01	5.26
2 S	6.10	6.62	7.08	7.42	7.66	8.40	4.80	5.10	5.40	5.70	6.00	6.22	5.48	5.76	6.06	6.34	6.66	7.00
3 S	9.15	9.93	10.62	11.13	11.49	12.60	7.20	7.65	8.10	8.55	9.00	9.33	8.22	8.64	9.09	9.51	9.99	10.50
3-1/2S	10.68	11.59	12.39	12.99	13.41	14.70	8.40	8.93	9.45	9.98	10.50	10.89	9.59	10.08	10.61	11.10	11.66	12.25
4S	12.18	13.21	14.12	14.81	15.29	16.77	9.58	10.18	10.77	11.38	11.97	12.52	10.96	11.52	13.64	14.27	14.99	15.75
5 S	15.25	16.55	17.70	18.55	19.15	21.00	12.00	12.75	13.50	14.25	15.00	15.55	13.70	14.40	15.15	15.85	16.65	17.50
7 S	21.35	23.17	24.78	25.97	26.81	29.40	16.80	17.85	18.90	19.95	21.00	21.77	19.18	20.16	21.21	22.19	23.31	24.50
8-1/2 S	25.93	28.14	30.09	31.54	32.56	35.70	20.40	21.68	22.95	24.23	25.50	26.44	27.40	28.80	30.30	31.70	33.30	35.00
10 S	40.30	44.10	47.60	50.50	53.60	56.80	30.80	32.30	34.00	35.70	37.50	39.30	27.40	28.80	30.30	31.70	33.30	35.00
13S	48.36	52.92	57.12	60.60	64.32	68.16	36.96	38.76	40.80	42.84	45.00	47.16	32.88	34.56	36.36	38.04	39.96	42.00
16S	60.45	66.15	71.40	75.75	80.40	85.20	46.20	48.45	51.00	53.55	56.25	58.95	41.10	43.20	45.45	47.55	49.95	52.50
19S	72.54	79.38	85.68	90.90	96.48	102.24	55.44	58.14	61.20	64.26	67.50	70.74	49.32	51.84	54.54	57.06	59.94	63.00
25S	100.83	110.34	119.10	126.35	134.11	142.11	77.06	80.81	85.07	89.32	93.83	98.33	68.55	72.06	75.81	79.31	83.32	83.32
32S	129.06	141.23	152.44	161.73	171.66	181.91	98.64	103.44	108.89	114.33	120.10	125.86	87.75	92.23	97.04	101.52	106.65	106.65
38S	153.59	168.07	181.41	192.46	204.27	216.47	117.38	123.10	129.58	136.05	142.91	149.77	104.42	109.76	115.47	120.81	126.91	126.91

NRF(E)、 RT(E)、RTB、RTBT、RTBM(T)扩展容量表（KW）
NRF(E)、 RT(E)、RTB、RTBT、RTBM(T)extended capacity tables

R407c 型号 规格	蒸发温度（℃） Evaporating temperature （℃）																	
	+10℃						+4.4℃						-6.7℃					
	通过阀的压降 Pressure drop across valve (MPa)																	
	0.54	0.72	0.90	1.08	1.26	1.44	0.54	0.72	0.90	1.08	1.26	1.44	0.54	0.72	0.90	1.08	1.26	1.44
1/2 N	1.48	1.70	1.95	2.13	2.30	2.43	1.47	1.69	1.86	2.03	2.20	2.36	1.19	1.54	1.69	1.86	2.03	2.19
1 N	2.96	3.40	3.90	4.25	4.60	4.86	2.94	3.37	3.71	4.05	4.39	4.72	2.37	3.07	3.37	3.71	4.05	4.38
1-1/2 N	4.44	5.10	5.85	6.38	6.90	7.29	4.41	5.06	5.57	6.08	6.59	7.08	3.56	4.61	5.06	5.57	6.08	6.57
2 N	5.92	6.80	7.80	8.50	9.20	9.72	5.88	6.74	7.42	8.10	8.78	9.44	4.74	6.14	6.74	7.42	8.10	8.76
3 N	8.88	10.20	11.70	12.75	13.80	14.58	8.82	10.11	11.13	12.15	13.17	14.16	7.11	9.21	10.11	11.13	12.15	13.14
4N	11.81	13.57	15.56	16.96	18.35	19.39	11.73	13.45	14.80	16.16	17.52	18.82	9.46	12.25	13.45	14.80	16.16	17.48
5 N	14.80	17.00	19.50	21.25	23.00	24.30	14.70	16.85	18.55	20.25	21.95	23.60	11.85	15.35	16.85	18.55	20.25	21.90
6N	17.76	20.40	23.40	25.50	27.60	29.16	17.64	20.32	22.26	24.30	26.34	28.32	14.22	18.42	20.32	22.26	24.30	26.28
7-1/2 N	22.20	25.50	29.25	31.88	34.50	36.45	22.05	25.28	27.83	30.38	32.93	35.40	17.78	23.03	25.28	27.83	30.38	32.85
10 N	29.60	34.00	39.00	42.50	46.00	48.60	29.40	33.70	37.10	40.50	43.90	47.20	23.70	30.70	33.70	37.10	40.50	43.80
12 N	35.52	40.80	46.80	51.00	55.20	58.32	35.28	40.44	44.52	48.60	52.68	56.64	28.44	36.84	40.44	44.52	48.60	52.56
14N	38.78	44.80	52.08	56.70	61.60	65.24	38.36	44.52	51.80	56.42	59.36	61.60	37.80	43.54	47.32	51.94	56.70	61.46
18N	49.86	57.60	66.96	72.90	79.20	83.88	49.32	57.24	66.60	72.54	76.32	79.20	48.60	55.98	60.84	66.78	72.90	79.02
22N	60.94	70.40	81.84	89.10	96.80	102.52	60.28	69.96	81.40	88.66	93.28	96.80	59.40	68.42	74.36	81.62	89.10	96.58
26N	72.02	83.20	96.72	105.30	114.40	121.16	71.24	82.68	96.20	104.78	110.24	114.40	70.20	80.86	87.88	96.46	105.30	114.14
35N	96.95	112.00	130.20	141.75	154.00	163.10	95.90	111.30	129.50	141.05	148.40	154.00	94.50	108.85	118.30	129.85	141.75	153.65
45N	124.65	144.00	167.40	182.25	198.00	209.70	123.30	143.10	166.50	181.35	190.80	198.00	121.50	139.95	152.10	166.95	182.25	197.55
55N	152.35	176.00	204.60	222.75	242.00	256.30	150.70	174.90	203.50	221.65	233.20	242.00	148.50	171.05	185.90	204.05	222.75	241.45

R407c 型号 规格	蒸发温度（℃） Evaporating temperature （℃）																	
	-17.8℃						-29℃						-40℃					
	通过阀的压降 Pressure drop across valve (MPa)																	
	0.72	0.90	1.08	1.26	1.44	1.62	0.90	1.08	1.26	1.44	1.62	1.80	0.90	1.08	1.26	1.44	1.62	1.80
1/2 N	1.23	1.37	1.50	1.62	1.69	1.86	1.08	1.18	1.27	1.38	1.44	1.52	0.88	0.95	1.00	1.08	1.13	1.18
1 N	2.45	2.74	3.00	3.24	3.37	3.71	2.16	2.36	2.53	2.75	2.87	3.03	1.75	1.89	2.00	2.16	2.26	2.36
1-1/2 N	3.68	4.11	4.50	4.86	5.06	5.57	3.24	3.54	3.80	4.13	4.31	4.55	2.63	2.84	3.00	3.24	3.39	3.54
2 N	4.90	5.48	6.00	6.48	6.74	7.42	4.32	4.72	5.06	5.50	5.74	6.06	3.50	3.78	4.00	4.32	4.52	4.72
3 N	7.35	8.22	9.00	9.72	10.11	11.13	6.48	7.08	7.59	8.25	8.61	9.09	5.25	5.67	6.00	6.48	6.78	7.08
4N	9.80	10.93	11.97	12.93	13.45	14.80	8.62	9.42	10.09	10.97	11.45	12.09	6.98	7.54	7.98	8.62	9.02	9.42
5 N	12.25	13.70	15.00	16.20	16.85	18.55	10.80	11.80	12.65	13.75	14.35	15.15	8.75	9.45	10.00	10.80	11.30	11.80
6N	14.70	16.44	18.00	19.44	20.22	22.26	12.96	14.16	15.18	16.50	17.22	18.18	10.50	11.34	12.00	12.96	13.56	14.16
7-1/2 N	18.38	20.55	22.50	24.30	25.28	27.83	16.20	17.70	18.98	20.63	21.53	22.73	13.13	14.18	15.00	16.20	16.95	17.70
10 N	24.50	27.40	30.00	32.40	33.70	37.10	21.60	23.60	25.30	27.50	28.70	30.30	17.50	18.90	20.00	21.60	22.60	23.60
12 N	29.40	32.88	36.00	38.88	40.44	44.52	25.92	28.32	30.36	33.00	34.44	36.36	21.00	22.68	24.00	25.92	27.12	28.32
14N	35.00	39.20	42.98	46.34	51.94	53.34	28.00	30.80	33.04	35.42	37.24	39.20	19.32	22.40	23.10	24.50	26.04	27.30
18N	45.00	50.40	55.26	59.58	66.78	68.58	36.00	39.60	42.48	45.54	47.88	50.40	24.84	28.80	29.70	31.50	33.48	35.10
22N	55.00	61.60	67.54	72.82	81.62	83.82	44.00	48.40	51.92	55.66	58.52	61.60	30.36	35.20	36.30	38.50	40.92	42.90
26N	65.00	72.80	79.82	86.06	96.46	99.06	52.00	57.20	61.36	65.78	69.16	72.80	35.88	41.60	42.90	45.50	48.36	50.70
35N	87.50	98.00	107.45	115.85	129.85	133.35	70.00	77.00	82.60	88.55	93.10	98.00	48.30	56.00	57.75	61.25	65.10	68.25
45N	112.50	126.00	138.15	148.95	166.95	171.45	90.00	99.00	106.20	113.85	119.70	126.00	62.10	72.00	74.25	78.75	83.70	87.75
55N	137.50	154.00	168.85	182.05	204.05	209.55	110.00	121.00	129.80	139.15	146.30	154.00	75.90	88.00	90.75	96.25	102.30	107.25